SIEMENS

iQ700, Built-in oven with microwave function, 60 x 60 cm, Matt Black
HM976GMM1

- ✓ Matt Edition – the understated elegance of black matte appliances.
- ✓ TFT-Touchdisplay Plus – Smooth-touch navigation for simple and intuitive operation.
- ✓ cookControl Pro – Excellent results, whatever the recipe or circumstances.
- ✓ Cooking Assistant: Intuitively set the right programme.
- ✓ activeClean®: The automatic, self-cleaning oven system for less efforts in oven cleaning.

Included accessories

1 x enamel baking tray, 1 x combination grid, 1 x universal pan, 1 x air fry & grill tray

Optional accessories

AOVG9MF00S Mech. Child safety lock (Gap size: 4mm), HZ327000 Baking stone, HZ531010 Baking tray, non-stick ceramic coated, HZ532010 Universal pan, non-stick ceramic coated, HZ617000 Pizza pan, enamelled, HZ629070 Air Fry & Grill tray, HZ631070 Baking tray, enamelled, HZ632070 Multipurpose pan, enamelled, HZ633001 Lid for professional pan, enamelled, HZ633070 Professional pan with grid, enamelled, HZ633073 Professional pan, enamelled, HZ634000 Baking and roasting grid (standard), HZ635000 AirFry & Grill Set, HZ636000 Glass pan, HZ65MA00 Assembly kit for vertical installation, HZ664000 Baking and roasting grid (steam), HZ66X650 Cover Strip, HZ915003 Glass roasting dish, 5,4 L, HZG0AS00 Connecting cable 3m

Features

Technical Data

Type of micro-wave oven: ..... MW-Combi
Type of control: ..... Electronic
Dimensions: ..... 595x594x548 mm
Cavity dimensions: ..... 357.0 x 480 x 392.0 mm
Length electrical supply cord: ..... 120 cm
Net weight: ..... 45.5 kg
Gross weight: ..... 48.9 kg
Maximum micro-wave power[11]: ..... 800 W
Number of Power Levels: 5
Turntable: ..... No
Cavity material: ..... Enamelled steel
Clock: ..... Yes
Included accessories: ..... 1 x enamel baking tray, 1 x combination grid, 1 x universal pan, 1 x air fry & grill tray
Height of the appliance: ..... 595 mm
Width of the appliance: ..... 594 mm
Depth: ..... 548 mm
Maximum micro-wave power[11]: ..... 800 W
Connection rating: ..... 3600 W
Fuse protection: ..... 16 A
Voltage: ..... 220-240 V
Frequency: ..... 50; 60 Hz
Plug type: ..... Gardy plug w/ earthing
Connecting cable type: ..... 1-phase, neutral conductor
Dimensions of the packed product: ..... 26.37 x 26.37 x 26.77
Net weight: ..... 100.000 lbs
Gross weight: ..... 108.000 lbs

4 242003 982426

[1] Intelligent inverter technology: maximum output power will be regulated to 600 W when used in longer operation

SIEMENS

iQ700, Built-in oven with microwave function, 60 x 60 cm, Matt Black
HM976GMM1

Features

Type of oven / heating system:
- Oven with microwave with 20 heating methods: 4D hotAir, Conventional heat, hotAir grilling, Full width grill, Half width grill, Pizza setting, coolStart, Bottom heat, Gentle heating, Plate warming setting, Keep warm, hotAir gentle, Conventional heat gentle, Air fry, microwave, 4D hotair + microwave, Top/bottom heat + microwave, grill + microwave, half width grill + microwave, hotair grilling + microwave
- Heating methods only via Home Connect App: let rest, preheating
- Max. Power: 800 W; 5 Microwave power settings (90 W,180 W,360 W,600 W, boost) with Inverter (MW)
- Intelligent inverter technology: maximum output power will be regulated to 600 W when used in longer operation
- Temperature range 30 °C - 300 °C
- Cavity volume: 67 l
- Cavity: smooth

Hook-in racks / rails
- Number of shelf levels: 5
- 1 level telescopic shelf, pyrolitic proof, standard extension

Design:
- Matt Surface of the panel and door
- Touchcontrol
- Cavity inner surface: enamel anthracite

Cleaning:
- activeClean®
- humidClean Plus

Comfort:
- Cooking Assistant
- TFT-Touchdisplay Plus
- electronic clock
- Temperature proposal
- Actual temperature display
- Optical temperature control
- Drop down door
- softMove for gentle opening and closing of the oven door
- cookControl Pro
- roasting sensor
- roastingSensor Plus
- fastPreheat
- coolStart
- LED illumination, Independent oven interior light button
- Integral cooling fan
- Home Connect ready on Wi-Fi
- 4D hotAir: even heat distribution on any level, also simultaneously

Accessory:
- 1 x air fry & grill tray, 1 x enamel baking tray, 1 x combination grid, 1 x universal pan

Environment and Safety:
- Very low door temperature
- Quadruple glazed door with heat reflective glass glazed CoolTouch door
- Automatic door lock during pyrolysis
- Child lock
- Residual heat indicator
- Start-/Stop button
- Door contact switch

Technical Information
- Length of mains cable: 120 cm
- Nominal voltage: 220 - 240 V
- Total connected load electric: 3.6 KW

Dimensions:
- Appliance dimension (HxWxD): 595 mm x 594 mm x 548 mm
- Niche dimension (HxWxD): 585 mm - 595 mm x 560 mm - 568 mm x 550 mm
- “Please reference the built-in dimensions provided in the installation drawing”

SIEMENS

iQ700, Built-in oven with microwave function, 60 x 60 cm, Matt Black
HM976GMM1

Dimensioned drawings

Measurements in mm

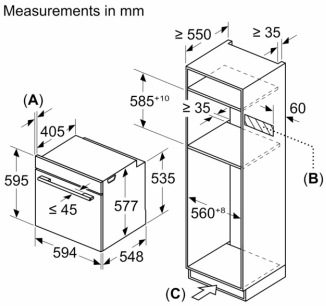

A: 19.5 mm

B: Space for appliance connection 320 x 115 mm

C: Ventilation space in the base ≥ 200 cm²

Installing two appliances on top of each other
Air exchange

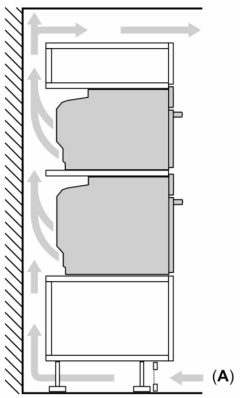

A: Air inlet ≥ 200 cm²

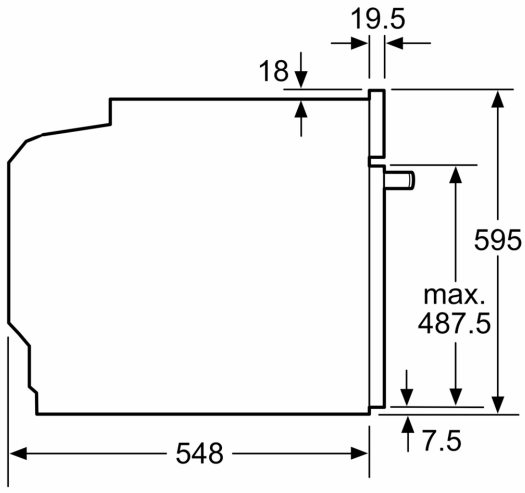

measurements in mm

Measurements in mm
Worktop thickness when installing underneath a hob
(incl. substructure, if required)

Hob type	raised	flush
Induction hob	≥ 37	≥ 38
Full surface induction hob	≥ 47	≥ 48
Gas hob	≥ 30	≥ 38
Electric hob	≥ 27	≥ 30

SIEMENS
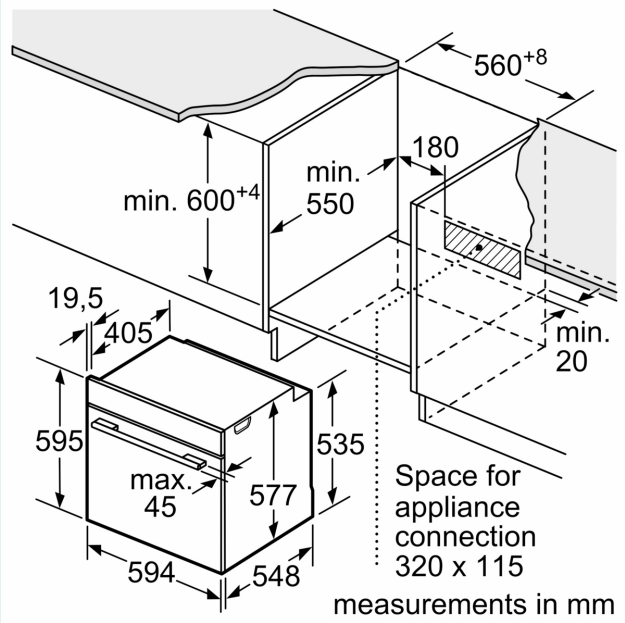
Dimensioned drawings