SIEMENS

iQ300, free-standing fridge-freezer with freezer at bottom, 203 x 70 cm, Brushed steel
KG49NVIDG

The freestanding fridge freezer with hyperFresh <0°C> for longer freshness, Total noFrost for no more defrosting, and a metal backwall for even cooling.

- ✓ hyperFresh <0°C>: More space for fruit and vegetables. A cold climate for fish and meat.
- ✓ Total noFrost: Never defrost your freezer again and bid farewell to water drops on the fridge backwall.
- ✓ Metal backwall with multiAirflow: Evenly cooled food and drinks on all levels.
- ✓ doorAlarm: Reminds you to close the door and keep the cold inside.
- ✓ noDistance: Saving space and giving full drawer access.

Features

Technical Data

Energy Efficiency Class (Regulation (EU) 2017/1369)[1]: ..... D
Average annual energy consumption in kilowatt hour per year (kWh/a)[2]: ..... 223 kWh/annum
Sum of volume of frozen compartments: ..... 129 l
Sum of volume of chill compartments: ..... 311 l
Airborne acoustical noise emissions : ..... 35 dB(A) re 1 pW
Airborne acoustical noise emission class: ..... B
Design: ..... Free-standing
Number of compressors: 1
Number of independent cooling systems: 2
Width of the appliance: ..... 700 mm
Height: ..... 2030 mm
Depth: ..... 667 mm
Net weight: ..... 78.7 kg
Required niche size for installation (HxWxD): ..... GENERAL.N_A mm
Door panel options: ..... Not possible
Door hinge: ..... Right reversible
Number of Adjustable Shelves in fridge compartment: 3
Shelves for Bottles: ..... Yes
Frost free system: ..... Fridge and freezer
Interior ventilator: ..... No
Reversible Door Hinge: ..... Yes
Length electrical supply cord: ..... 231 cm
Noise level: ..... 35 dB(A) re 1 pW
Multi-Flow Air Tower: ..... Yes
Fast cooling switch: ..... Yes
Fast freezing function: ..... Yes
Temperature Controlled Drawer: ..... No
Humidity Control Drawer: ..... No
Number of Door Bins - Refrigerator: 4
Door bin adjustability - Refrigerator: ..... Yes
Tilt-out door bins in fridge: ..... No
Gallon wide door bins: ..... Yes
Number of Gallon storage: 1
Motorized Shelf: ..... No
Material of the shelves: ..... Safety glass
Door opened indicator freezer: ..... No
Automatic motor-driven ice-maker: ..... No
Fuse protection: ..... 10 A
Voltage: ..... 220-240 V
Frequency: ..... 50 Hz
Storage Period in Event of Power Failure (h): ..... 18 h
Door panel options: ..... Not possible
Noise level: ..... 35 dB(A) re 1 pW
ENERGY STAR® certified: ..... No
Plug type: ..... Gardy plug w/ earthing

[1] Scale of Energy Efficiency Classes from A to G
[2] Based on the results of the standard 24-hour test. Actual consumption depends on usage/position of the appliance.

SIEMENS

Dimensions of the packed product: ..... 82.48 x 29.92 x 30.70
Net weight: ..... 173.000 lbs
Gross weight: ..... 188.000 lbs

4 242003 985502

SIEMENS

iQ300, free-standing fridge-freezer with freezer at bottom, 203 x 70 cm, Brushed steel
KG49NVIDG

Features

- KG49NVIDG
- Total noFrost - frost-free freezer and no condensation in fridge
- Brushed steel anti-fingerprint Doors

Performance and consumption
- Energy Class: D
- Total Volume: 440 l
- Annual Energy Consumption: 223 kWh/a
- Noise Level : 35 dB , B Class

Design and Styling
- Doors Brushed steel anti-fingerprint, side panels Pearl grey
- Integrated vertical handle
- LED with Soft Start in fridge section
- Metal backwall with multi airflow

Convenience & Safety
- Total noFrost - frost-free freezer and no condensation in fridge
- Twin LED electronic control
- Two Cooling Systems
- Super Cooling: automatic deactivation
- Optical and acoustic door open warning system
- Optical and acoustic warning system for malfunction of freezer compartment

Fridge Compartment
- Net Fridge Volume : 311 l
- Multi Airflow-System
- Bottle storage: Bottle grid
- 5 PC safety glass shelves of which 3 are height adjustable
- 4 door bins, thereof 1 door bin(s) high

Freshness System
- 1 hyperFresh ◄0°C► box - fish and meat stay fresh for longer.
- 1 hyperFresh box with adjustable humidity - keeps fruit and vegetables fresh for longer.

Freezer
- Net Freezer Volume : 129 l
- Freezing capacity 24h: 11 kg
- Temperature rise time : 18 H
- Fast Freeze Facility
- 3 transparent freezer drawers

Dimensions
- Appliance Dimensions (H x W x D): 203 cm x 70 cm x 66.7 cm

Technical Information
- Door right hinged, reversible
- Height adjustable front feet
- Length of power cord: 231 cm
- Climate Class: SN-T
- Nominal voltage: 220 - 240 V

Accessories
- ice cube tray
- ice cube tray

Country Specific Options
- Based on the results of the standard 24-hour test. Actual consumption depends on usage/position of the appliance.

Environment and Safety

Installation

iQ300, free-standing fridge-freezer with freezer at bottom, 203 x 70 cm, Brushed steel
KG49NVIDG

Dimensioned drawings

Measurements in mm

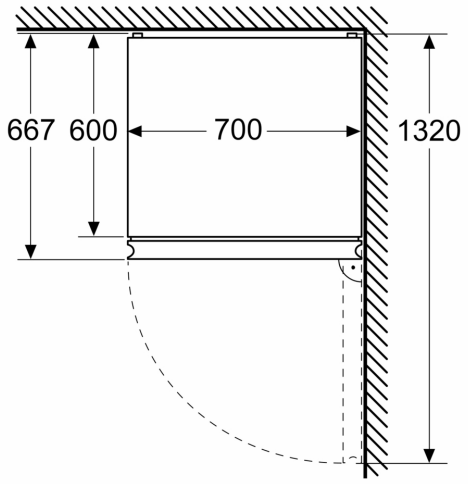

Measurements in mm

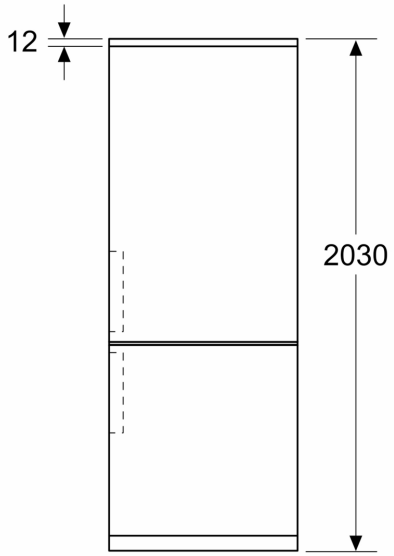
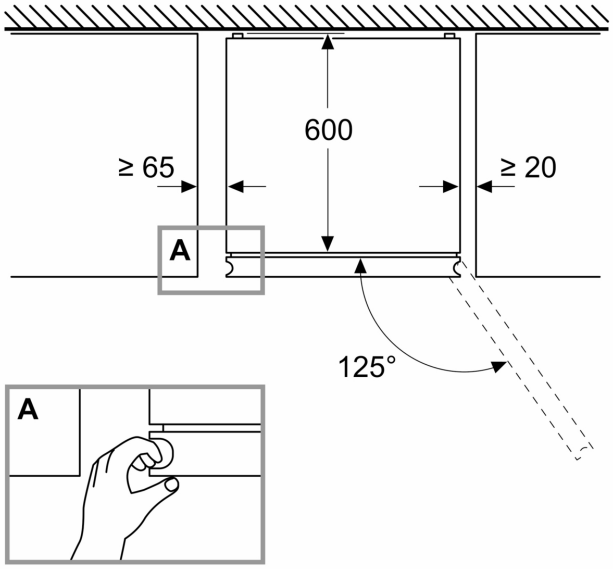
Measurements in mm